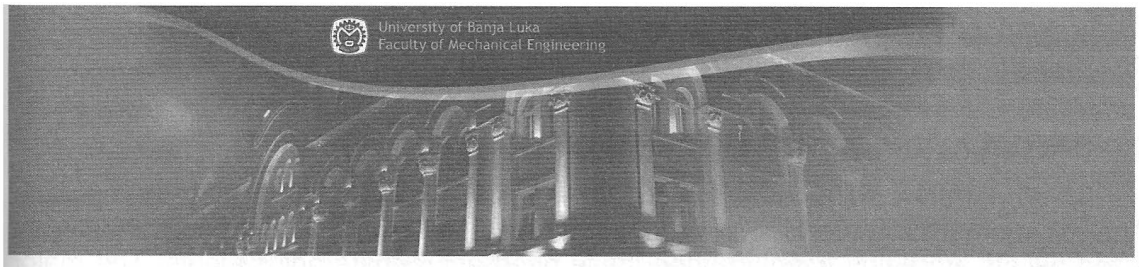

STACKING AISLE WIDTH FOR FORKLIFT TRUCKS IN PALLETIZED STORAGE AND HANDLING SYSTEMS

Nenad Miloradović [1], Rodoljub Vujanac [2], Blaža Stojanović [3]

Summary: *Forklift trucks are restricted by the size of aisle widths in which they can operate. Stacking aisle width is the aisle width required under the most favourable conditions for stacking operations with the forklift truck positioned at right angles to the aisle. Accordingly, the load is swung into position only within the stacking aisle width, with exception of the forklift trucks that can only pick up loads from the floor and lay them down. For these trucks, the swinging operation is planned to be carried out above the lay-down location and has therefore been taken into account in the calculation of the stacking aisle width. Calculations are done using FEM regulation.*
Key words: *stacking aisle width, forklift truck, warehouse*

1. INTRODUCTION

There is a wide range of equipment available for moving pallets around a warehouse, from simple manual aids to sophisticated computer-controlled equipment. Some of the most common types are: hand pallet trucks, powered pallet trucks, forklifts, conveyors, automated guided vehicles (AGVs). In general, the above types of equipment are used solely for horizontal movement. For placing pallets into storage positions, some form of lifting mechanism is required. However, it should be noted that many of these lifting trucks are also commonly used for horizontal movement around the warehouse.

The most significant unit load in warehousing is probably the wooden pallet, and storage/handling systems specifically designed for this type of load are examined in this paper.

Wooden pallets made to standard sizes, although there are different standards, which can cause some problems with international movement. For example, the dominant pallet in continental Europe is the Europallet (1,200 mm by 800 mm), whilst the dominant UK pallet is slightly larger (1,200 mm by 1,000 mm), similar in size to that in the United States (48 inches by 40 inches). In addition to pallet size, other variables include the pallet construction: two-way or four-way fork entry, reversible or non-reversible (double-sided or single-sided), open- or close-boarded. Some pallets are

[1] Mr Nenad Miloradović, M.Sc., Kragujevac, Faculty of Mechanical Engineering, mnenad@kg.ac.rs
[2] Mr Rodoljub Vujanac, M.Sc., Kragujevac, Faculty of Mechanical Engineering, vujanac@kg.ac.rs
[3] Mr Blaža Stojanović, M.Sc., Kragujevac, Faculty of Mechanical Engineering, blaza@kg.ac.rs

made from other materials, such as plastic and fibreboard. The wooden pallet is probably the most commonly used of all the unit load types.

2. CALCULATION OF THE STACKING AISLE WIDTH

Fork trucks are restricted by the size of aisle widths in which they can operate. The minimum aisle width for 1.2 metre pallets is defined in [5]. Accordingly, if different sized pallets are being handled, then these need appropriate adjustments. The major problem with pallet sizes is where mixed pallet sizes are handled, for example with Euro pallets of 1200 by 800mm. Here the option taken is often one where the larger size of pallet being used will then determine the racking aisles width. Alternatively, separate areas for different sizes pallets will be required.

With the space saving of narrow aisle/very narrow aisle equipment, it could be envisaged that all warehouse should have them. However, wider aisle options are still viable, especially in warehouses that require much movement. As the aisle widths narrow, then speed slows. Wide aisle trucks enable the picking of pallets from racking and loading to a trailer immediately, combined with fast travel speed. They also operate at lower cost. So, wide aisles give more flexibility. Moving to narrow aisles gives greater storage density.

Therefore, the balance has to be determined between the speed of operation, the storage density and the cost. It is often not a easy decision but should be one on which time is taken, before erecting relatively permanent fixed racking structures and perhaps also committing to semi specialised and expensive handling equipment.

The general principles for internal warehouse layout include [1]:

- logical flow patterns with minimal cross-flows or backtracking of goods, based on analysis of movements, generally in a rectilinear layout,
- minimizing the amount of movement required for staff and for handling equipment,
- making the best use of building volume,
- good access to inventory (e.g. through adequate aisle widths),
- safe systems of work including the provision where possible of separate movement aisles and access doors for people and for mobile equipment, elimination of dead areas in which operators could be trapped, e.g. no aisles with closed ends.

3. INFLUENCE OF FORKLIFT TRUCK DESIGN AND LOAD DIMENSIONS

Manoeuvring allowance is the dimension by which the aisle width calculated from the dimensions of the forklift truck and the load is increased. Accordingly, inaccuracies in steering operations, as well as in the load dimensions and load application are taken into account.

200 mm are uniformly used as the manoeuvring allowance. This makes it easier to compare a variety of forklift truck designs and sizes with one another. Due to other factors, it may be required to increase the manoeuvring allowance. Other important factors are: floor not skid-proof, load units not rigid, large load dimensions which make precise driving approaches more difficult, operator skills.

According to measurement circumstances of truck and load, the aisle width is created from four possible geometrical situations [5]:

- regarding the truck side either radius W_a or with wide loads the truck load corner radius R;
- regarding the load the length as far as to the outer load side b_{12} or the diagonal of outer load corner;
- on three wheel trucks the diagonal usually lies outside the pivot point. Since the deviation is only minimal the centre is used;
- for low lift trucks, the normal case is the use with standard pallets. Therefore the same dimensions as for the standard pallets apply for the load dimensions.

Counterbalanced fork-lift trucks carry the payload forward of the front wheels (Figure 1), so there is always a turning moment tending to tip the truck forward. To balance this, a counterbalance weight is built into the rear of the machine – hence the name. Heavy components like engines and batteries are also positioned as far back as possible to help counter the overturning moment.

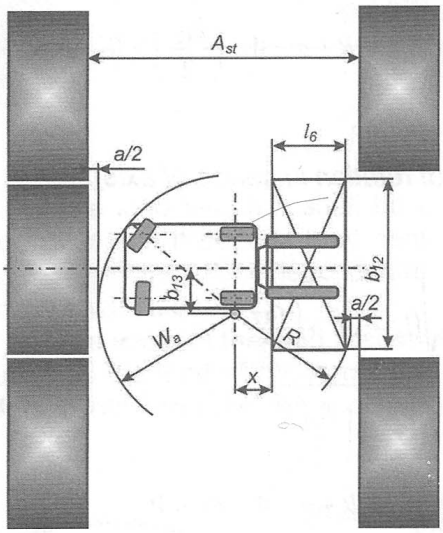

$$R = \sqrt{(l_6 + x)^2 + \left(\frac{b_{12}}{2} - b_{13}\right)^2}$$

$$A_{st} = W_a + x + l_6 + a \quad \text{if} \quad \frac{b_{12}}{2} < b_{13}$$

$$A_{st} = W_a + R + a$$

$$\text{if} \quad \frac{b_{12}}{2} > b_{13} \quad \text{and} \quad \left(\frac{b_{12}}{2} + b_{13}\right) < W_a$$

$$A_{st} = \frac{b_{12}}{2} + b_{13} + R + a \quad \text{if} \quad \left(\frac{b_{12}}{2} + b_{13}\right) > W_a$$

Fig. 1 *Four wheel forklift truck (point of rotation outside of axle centre)*

Since the load is always in front of the front wheels, counterbalanced four wheel forklift trucks are long, necessitating a wide turning area. They therefore need to operate in wide aisles (e.g. for putting pallets into or out of racking) of about 3.5 metres or more. Consequently, although these trucks are very robust and fast, and are very good as 'yard trucks' and for vehicle loading and unloading, they are less appropriate for many activities inside the warehouse because of the space required for access aisles.

Most forklift trucks have rear-wheel steering (Figure 1, 2). However, there are some trucks that are articulated so that the truck body 'bends' in the middle during turning. These forklift are designed to operate in aisles of as little as 1.7 - 1.8 metres.

Reach trucks (Figure 3) are designed to be smaller and lighter than counterbalanced trucks and to operate in a smaller area. This is achieved by having a mast that can move forward or back in channels in the outrigger truck legs. When picking up or setting down a load, the truck is turned through 90° to face the load location; the mast reaches forward, places or retrieves the load, and is retracted back

into the area enclosed by the wheels. The truck travels with the mast in the retracted position. This virtually eliminates the need for a counterbalance weight, and reduces the truck length. Reach trucks are battery-powered. They are widely used in conventional, i.e. non-automated, warehouses. Aisle widths for trucks placing standard pallets into storage are typically in the range 2.8 m to 3 m, which is considerably less than for standard counterbalanced trucks.

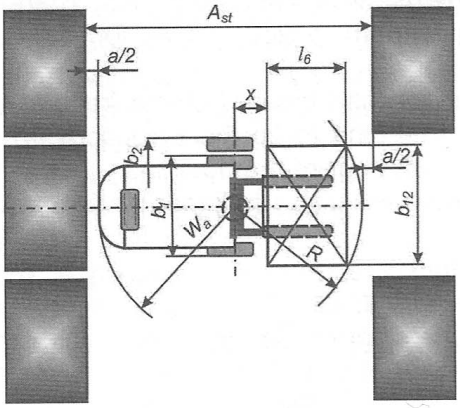

$$R = \sqrt{(l_6 + x)^2 + \left(\frac{b_{12}}{2}\right)^2}$$

$$A_{st} = W_a + R + a \quad \text{if} \quad \left(\frac{b_{12}}{2}\right) < W_a$$

$$A_{st} = \frac{b_{12}}{2} + R + a \quad \text{if} \quad \left(\frac{b_{12}}{2}\right) > W_a$$

Fig. 2 *Three wheel forklift truck (point of rotation in centre of axle)*

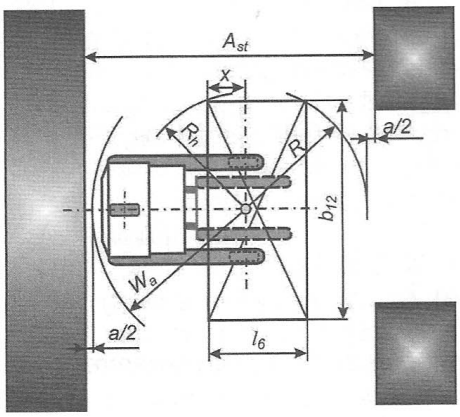

$$R = \sqrt{(l_6 - x)^2 + \left(\frac{b_{12}}{2}\right)^2}$$

$$R_h = \sqrt{x^2 + \left(\frac{b_{12}}{2}\right)^2}$$

$$A_{st} = W_a + R + a \quad \text{if} \quad R_h < W_a$$

$$A_{st} = R_h + R + a \quad \text{if} \quad R_h > W_a$$

Fig. 3 *Reach truck (point of rotation in centre of axle)*

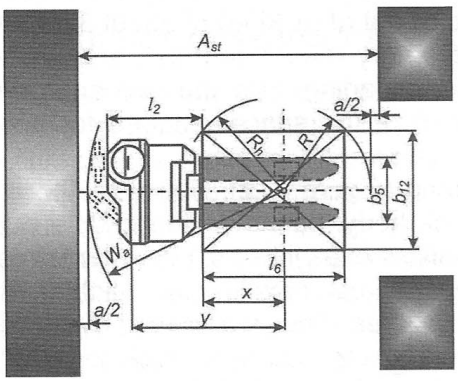

$$R = \sqrt{(l_6 - x)^2 + \left(\frac{b_{12}}{2}\right)^2}$$

$$R_h = \sqrt{x^2 + \left(\frac{b_{12}}{2}\right)^2}$$

$$A_{st} = W_a + R + a \quad \text{if} \quad R_h < W_a$$

$$A_{st} = R_h + R + a \quad \text{if} \quad R_h > W_a$$

Fig. 4 *High lift pallet truck*

Narrow and very narrow aisle trucks should be used to reduce overall warehouse area and therefore shorten distance within the storage area. Shorter distance travelled reduce handling costs. Automatic height selection, or cameras at fork height, may be used to assist the driver when locating pallets at high level (Fig. 4)

The layout of the low lift pallet truck is presented in Figure 5.

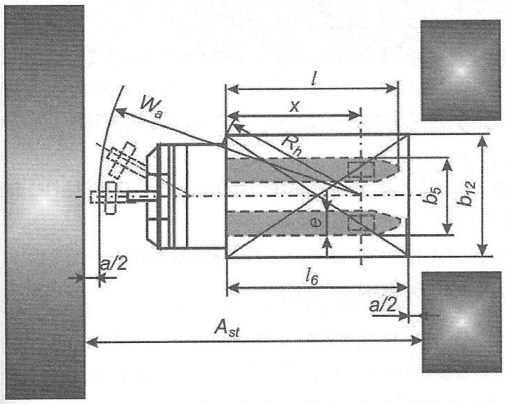

$$R_h = \sqrt{x^2 + \left(\frac{b_{12}}{2}\right)^2}$$

$$A_{st} = W_a + l_6 - x + a \quad \text{if} \quad R_h < W_a$$

$$A_{st} = R_h + l_6 - x + a \quad \text{if} \quad R_h > W_a$$

Fig. 5 *Low lift pallet truck*

The load length l_6 shall be used as 2xc, whereby c is the standardised load centre distance. If several load centre distances are standardised, the smaller value must be selected. If no load centre is specified, the value mentioned for the rated capacity shall be used.

The width of the load predominantly intended for each type of forklift truck shall be used as the load width. Accordingly, the standardised dimensions of the load units (pallets, containers) and the specifications for the load length shall be observed.

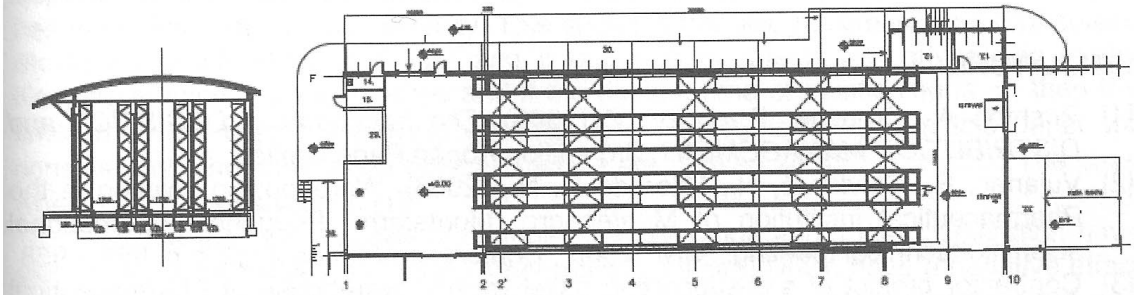

Fig. 6 *Design of pallet racking layout [2]*

An efficient design of pallet racking layout which should provide safe warehousing operation considers recognition of basic principles of warehousing as well as methods for their realization. Based on previous principles, a design solution for warehousing in Phermaceutical Institution of Montenegro "Montefarm" in Podgorica is carried out [3]. Warehouse area has dimensions 33000x13000x8000 mm and it is fitted with Ponteggi Dalmine equipment [4]. The solution builds on the long standing experience gained in design and construction of warehousing systems as well as on usage of the actual FEM regulations.

4. CONCLUSION

This paper has set out the basic storage and handling systems for palletized goods, and the essential characteristics of the different systems. A key aspect for determining the most appropriate system for a particular application is to select one whose characteristics most closely match the overall requirements of the warehouse within which it is to work. In most warehouses more than one system is used.

There is a range of other specialist pallet stacking equipment for use with specific storage types. Typically, space inside a warehouse is more expensive than space outside a warehouse. Therefore, 90° docks are more popular than finger docks because they require less inside space.

The basic objectives for determining the most appropriate storage and handling system for any application are likely to include:

- effective use of space - building height, building area and access aisles,
- good access to pallets for taking out and replenishing,
- high speed of throughput,
- low levels of damage,
- high levels of accuracy,
- integrity and security of inventory,
- personnel safety,
- minimum overall system cost.

There are often compromises to be made between these objectives. For example, storage systems that utilize building space most effectively often do not give particularly good access to the stock, and vice versa. On the other hand, where a system offers both excellent space utilization and individual access (as with powered mobile racking), then speed of throughput is compromised. Thus, a trade off often has to be made between these factors when deciding on the use of any storage and handling system.

LITERATURE

[1] Rushton A., Croucher P., Baker P.,(2006). *The handbook of LOGISTICS and DISTRIBUTION MANAGEMENT,* 3rd edition Kogan Page Limited.

[2] Vujanac, R., Slavković, N., Miloradović, N., (2006). Warehousing solution in the Pharmaceutical institution of Montenegro "Montefarm" Podgorica, International scientific-technical meeting, *"GNP 2006", Conference Proceedings,* p.p. 953 – 958

[3] Contractor project of self-supporting pallet racking warehouse at Pharmaceutical institution of Montenegro - "Montefarm" Podgorica, "IC Engineering" Kragujevac and Faculty of Mechanical Engineering from Kragujevac, 2003

[4] Ponteggi Dalmine, Gruppo Marcegaglia, Product Range, Rapid - Block Catalogue, Milano

[5] FEM 4.005 (2005) *Industrial trucks – 90° stacking aisle width.* FEDERATION OF EUROPEAN MATERIALS HANDLING. Product Group Industrial Trucks