A-SIDE

DeepTech Connect 2026

INTERNATIONAL CONFERENCE

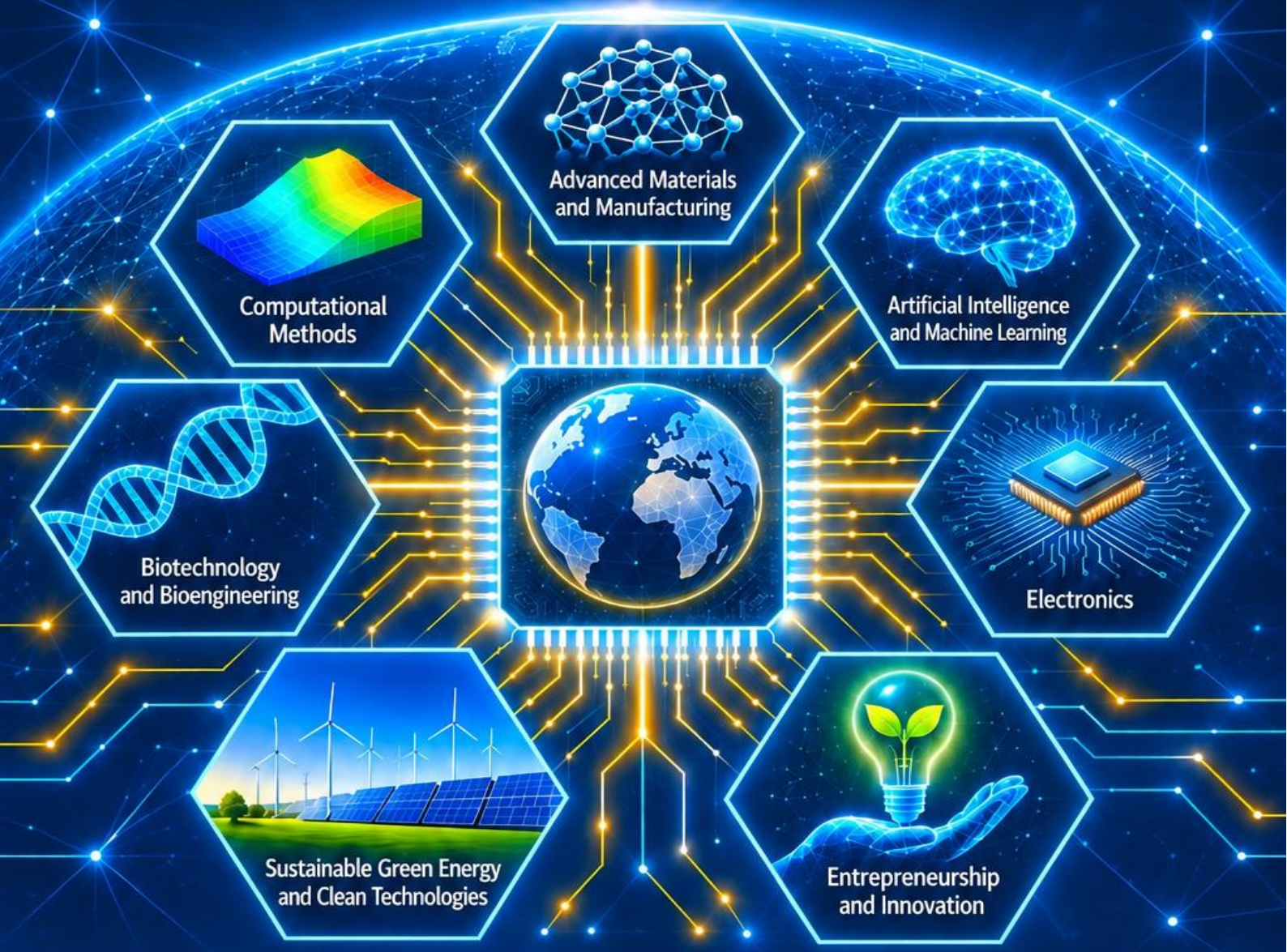

CONFERENCE PROCEEDINGS



Kragujevac, Serbia | Dublin, Ireland | Ioannina, Greece | Tours, France
Bergamo, Italy | Mondragon, Spain | Zvornik, Bosnia & Herzegovina | Gebze, Turkey

April 24, 2026

DEEPTECH CONNECT 2026

The First DeepTech Connect International Conference 2026

April 24, 2026

Kragujevac, Serbia, Dublin, Ireland, Ioannina, Greece, Tours, France, Bergamo, Italy, Mondragon, Spain, Zvornik, Bosnia and Herzegovina, Gebze, Turkey

CONFERENCE PROCEEDINGS

Editor: Fatima Zivic

The First DeepTech Connect International Conference 2026

ISBN 978-86-6335-134-9

https://doi.org/10.46793/IDeepTechConnect

Editor: Fatima Živić, Faculty of Engineering, University of Kragujevac

Publisher: Faculty of Engineering, University of Kragujevac

Sestre Janjić 6, 34000 Kragujevac, Serbia

For the Publisher: Slobodan Savić

Faculty of Engineering, University of Kragujevac

Technical editors: Marija Brankovic, Institute for Information Technologies Kragujevac, Faculty of Engineering, University of Kragujevac

Strahinja Milenkovic, Institute for Information Technologies Kragujevac, Faculty of Engineering, University of Kragujevac

Nikola Kotorcevic, Faculty of Engineering, University of Kragujevac

Dusan Milojevic, Faculty of Engineering, University of Kragujevac

Printed by: Faculty of Engineering, University of Kragujevac

Sestre Janjic 6, 34000 Kragujevac, Serbia

Circulation: 100 copies (electronic publication on CDs) and online

Copyright © 2026 by Faculty of Engineering, University of Kragujevac

The publication of this Conference Proceedings was funded through the EIT's HEI Initiative A-SIDE project, https://a-side-project.eu "Alliance for Sustainable Product Innovation in a Data Driven Economy", supported by EIT RawMaterials, funded by the European Union.

Organizing Committee

General Chair

Prof. Fatima Zivic	Faculty of Engineering, University of Kragujevac, Serbia

Co-location Chairs

Prof. Dermot Brabazon	Dublin City University, Ireland
Prof. Ana Kaplarevic-Malisic	Faculty of Science, University of Kragujevac, Serbia
Prof. Caroline Richard	University of Tours, France
Dr Maite Couto Ortega	Mondragon University, Spain
Prof. Yorgos Goletsis	University of Ioannina, Greece
Prof. Svetlana Pelemis	Faculty of Technology Zvornik, University of East Sarajevo, Bosnia and Herzegovina
Prof. Özgün Yücel	Gebze Technical University, Turkey
Prof. Giovanna Campopiano	University of Bergamo, Italy

Conference secretary

Marija Brankovic	Institute for Information Technologies Kragujevac, Faculty of Engineering, University of Kragujevac, Serbia
Strahinja Milenkovic	Institute for Information Technologies Kragujevac, Faculty of Engineering, University of Kragujevac, Serbia

Members

Joan Kelly	Dublin City University, Ireland
Dr. Neha Agarwal	Dublin City University, Ireland
Prof. Boban Stojanovic	Faculty of Science, University of Kragujevac, Serbia
Prof. Milos Ivanovic	Faculty of Science, University of Kragujevac, Serbia
Prof. Visnja Simic	Faculty of Science, University of Kragujevac, Serbia
Prof. Marina Svicevic	Faculty of Science, University of Kragujevac, Serbia
Prof. Nenad Stojanovic	Faculty of Science, University of Kragujevac, Serbia
Prof. Tatjana Stojanovic	Faculty of Science, University of Kragujevac, Serbia
Prof. Marko Milosevic	Faculty of Science, University of Kragujevac, Serbia
Prof. Milena Milutinovic	Faculty of Science, University of Kragujevac, Serbia
Prof. Sladjana Djordjevic	Faculty of Science, University of Kragujevac, Serbia
Prof. Nenad Grujovic	Faculty of Engineering, University of Kragujevac, Serbia
Nikola Kotorcevic	Faculty of Engineering, University of Kragujevac, Serbia
Dusan Milojevic	Faculty of Engineering, University of Kragujevac, Serbia
Isidora Grujic	Faculty of Engineering, University of Kragujevac, Serbia

Aleksandar Bodic	Faculty of Engineering, University of Kragujevac, Serbia
Zivana Jovanovic Pesic	Faculty of Engineering, University of Kragujevac, Serbia
Prof. Nenad Petrovic	Faculty of Medical Sciences, University of Kragujevac
Prof. François Tran Van	University of Tours, France
Prof. Isabelle Laffez	University of Tours, France
Maider Beitialarrangoita	Mondragon University, Spain
Iker Egizabal	Mondragon University, Spain
Dr Nikolaos Alexandros Theodorou	University of Ioannina, Greece
Prof. Mitar Perusic	Faculty of Technology Zvornik, University of East Sarajevo, Bosnia and Herzegovina
Prof. Milan Vukic	Faculty of Technology Zvornik, University of East Sarajevo, Bosnia and Herzegovina
Prof. Sanja Milic	Faculty of Education, University of East Sarajevo, Bosnia and Herzegovina
Prof. Dragan Vujadinovic	Faculty of Technology Zvornik, University of East Sarajevo, Bosnia and Herzegovina
Dr Ranka Sudžum	Faculty of Mechanical Engineering, University of East Sarajevo, Bosnia and Herzegovina
Dr Aleksija Djuric	Faculty of Mechanical Engineering, University of East Sarajevo, Bosnia and Herzegovina
Srdjan Vukovic	Faculty of Technology Zvornik, University of East Sarajevo, Bosnia and Herzegovina
Dr Mirjana Šipovac	Faculty of Technology Zvornik, University of East Sarajevo, Bosnia and Herzegovina
Prof. Muhammed Uzuntarla	Gebze Technical University, Turkey
Dr Daniela Acerbis	University of Bergamo, Italy
Dr Alessio Ardenghi	University of Bergamo, Italy
Dr Nadia Fabrizio	University of Bergamo, Italy
Dr Samuel Ashong	University of Bergamo, Italy

Scientific Committee

President

Fatima Zivic	Faculty of Engineering, University of Kragujevac, Serbia

Vice presidents

Dermot Brabazon	Dublin City University, Ireland
Ana Kaplarevic-Malisic	Faculty of Science, University of Kragujevac, Serbia
Caroline Richard	University of Tours, France
Maite Couto Ortega	Mondragon University, Spain
Yorgos Goletsis	University of Ioannina, Greece
Svetlana Pelemis	Faculty of Technology Zvornik, University of East Sarajevo, Bosnia and Herzegovina
Özgün Yücel	Gebze Technical University, Turkey
Giovanna Campopiano	University of Bergamo, Italy

Members

Neha Agarwal	Dublin City University, Ireland
Marija Stanic	Faculty of Science, University of Kragujevac, Serbia
Boban Stojanovic	Faculty of Science, University of Kragujevac, Serbia
Milos Ivanovic	Faculty of Science, University of Kragujevac, Serbia
Milan Stankovic	Faculty of Science, University of Kragujevac, Serbia
Visnja Simic	Faculty of Science, University of Kragujevac, Serbia
Marina Svicevic	Faculty of Science, University of Kragujevac, Serbia
Nenad Stojanovic	Faculty of Science, University of Kragujevac, Serbia
Tatjana Stojanovic	Faculty of Science, University of Kragujevac, Serbia
Sasa Simic	Faculty of Science, University of Kragujevac, Serbia
Slavko Radenkovic	Faculty of Science, University of Kragujevac, Serbia
Slobodan Savic	Faculty of Engineering, University of Kragujevac, Serbia
Nenad Grujovic	Faculty of Engineering, University of Kragujevac, Serbia
Velibor Isailovic	Faculty of Engineering, University of Kragujevac, Serbia
Vladimir Dunic	Faculty of Engineering, University of Kragujevac, Serbia
Nikola Vitković	Mechanical Engineering Faculty, University of Niš, Serbia
Dan Stan	Technical University of Cluj-Napoca, Romania
Zoran Levnajić	Faculty of Information Studies Novo mesto, Slovenia
Srđan Škrbić	Faculty of Information Studies Novo mesto, Slovenia
François Tran Van	University of Tours, France
Isabelle Laffez	University of Tours, France
Sain Milena López Perez	Mondragon University, Spain
Maria Vivar Simón	Mondragon University, Spain
Nikolaos Alexandros Theodorou	University of Ioannina, Greece

Dragan Vujadinovc	Faculty of Technology Zvornik, University of East Sarajevo, Bosnia and Herzegovina
Mitar Perusic	Faculty of Technology Zvornik, University of East Sarajevo, Bosnia and Herzegovina
Slavko Smiljanic	Faculty of Technology Zvornik, University of East Sarajevo, Bosnia and Herzegovina
Vladan Micic	Faculty of Technology Zvornik, University of East Sarajevo, Bosnia and Herzegovina
Aleksandar Dosic	Faculty of Technology Zvornik, University of East Sarajevo, Bosnia and Herzegovina
Milija Kraisnik	Faculty of Mechanical Engineering, University of East Sarajevo, Bosnia and Herzegovina
Aleksandra Mitrovic	University of Criminal Investigation and Police Studies Belgrade, Department of Forensic Engineering, Serbia
Hakan Yilmazer	Yıldız Technical University, Turkey
Peyman Mahouti	Yıldız Technical University, Turkey
Emrah Kirtil	Gebze Technical University, Turkey
Cristina Bettinelli	University of Bergamo, Italy
Tommaso Minola	University of Bergamo, Italy
Elisabetta Palumbo	University of Bergamo, Italy
Giacomo Copani	University of Bergamo, Italy
Giuseppe Rosace	University of Bergamo, Italy
Sergii Shelpuk	Shelpuk & Company, Poland
Mohamed Elbadawi	Queen Mary University of London, UK

Supported by

EIT Higher Education Initiative
European Institute of Innovation & Technology
Funded by the European Union

A-SIDE

УНИВЕРЗИТЕТ У КРАГУЈЕВЦУ
UNIVERSITY OF KRAGUJEVAC

DCU Ollscoil Chathair Bhaile Átha Cliath Dublin City University

University of Ioannina

université de TOURS

Mondragon Unibertsitatea

UNIVERSITÀ DEGLI STUDI DI BERGAMO

УНИВЕРЗИТЕТ У ИСТОЧНОМ САРАЈЕВУ
University of East Sarajevo

GEBZE TEKNİK ÜNİVERSİTESİ

DeepTech CONNECT

A-SIDE

PREFACE

The **FIRST DEEPTECH CONNECT INTERNATIONAL CONFERENCE 2026** was established as an international platform for presenting scientific research, showcasing technological innovations, connecting academia with industry, and promoting the transformation of research results into practical applications and market-oriented innovations. Building on the concept of research fairs and scientific exhibitions, the Conference provides an opportunity for researchers, students, companies, entrepreneurs and other innovation ecosystem stakeholders to exchange knowledge, demonstrate new technologies, establish partnerships and explore opportunities for scientific and technological cooperation.

Deep Tech encompasses advanced scientific and technological developments with the potential to generate significant breakthroughs and address major societal, environmental and industrial challenges. The Conference brings together interdisciplinary research and innovation across seven major thematic areas:

- **Advanced Materials and Manufacturing**, covering advanced and functional materials, additive manufacturing, architected materials, smart materials, mechanical behaviour, manufacturing processes, tribology, surface engineering, structural monitoring and sustainable manufacturing.
- **Artificial Intelligence and Machine Learning**, including machine learning algorithms, explainable AI, deep learning, computer vision, image processing, natural language processing, speech recognition, generative AI and AI applications in healthcare, engineering, manufacturing, energy and environmental systems.
- **Computational Methods**, encompassing numerical modelling, finite element analysis, computational simulation, engineering design optimization, manufacturing process modelling, structural and biomechanical simulation, virtual twins and advanced mathematical methods.
- **Biotechnology and Bioengineering**, including biological resources, food biotechnology, biomaterials, polymeric scaffolds, tissue engineering, engineered living materials, molecular and cellular research, biomedical instrumentation, healthcare technologies and rehabilitation.
- **Electronics**, addressing electronic circuit design, antennas, embedded systems, sensors, digital communications, wireless networking, Internet of Things (IoT), vehicle-to-everything (V2X) communications and cybersecurity.
- **Sustainable Green Energy and Clean Technologies**, covering waste management, circular economy, resource recovery, bioenergy, hydrogen production, energy efficiency, sustainable buildings, environmental monitoring, renewable energy, solar technologies, sustainable materials and digital energy systems.
- **Entrepreneurship and Innovation**, focusing on deep-tech entrepreneurship, start-up development, innovation ecosystems, technology transfer, knowledge valorisation, university–industry cooperation, management, education and skills development, green and social innovation, and digital and cultural innovation.

The scientific programme reflects the increasingly interdisciplinary nature of contemporary research, where advanced materials, computational methods, artificial intelligence, biotechnology, electronics and sustainable technologies contribute to the development of new products, processes and services.

Particular attention is given to the connections between scientific discovery, technological development, industrial applications and the commercialisation of research results.

The **First DeepTech Connect International Conference 2026** was held on **April 24, 2026**, simultaneously at eight university locations across Europe: University of Kragujevac (Serbia), Dublin City University (Ireland), University of Tours (France), Mondragon University (Spain), University of Ioannina (Greece), University of East Sarajevo (Bosnia and Herzegovina), Gebze Technical University (Türkiye) and University of Bergamo (Italy). This multi-location concept enabled participants to attend in person at their respective universities while connecting with researchers, students, companies and other participants across all locations through online networking. The simultaneous organisation of the Conference created an international environment for exchanging research capacities, identifying complementary expertise and initiating cross-border academic and industrial cooperation.

A distinctive feature of DeepTech Connect 2026 was its **research fair and exhibition format**. Instead of relying exclusively on conventional oral presentations, the Conference encouraged the presentation of scientific and technological contributions through physical exhibits, prototypes, experimental models, posters, computer simulations and interactive demonstrations. This approach provided opportunities for direct engagement with research results, enabling visitors to discuss scientific challenges, explore practical applications and interact with the researchers behind the innovations.

The Conference proceedings bring together contributions covering a broad spectrum of scientific disciplines and innovation activities. The **Advanced Materials and Manufacturing** section presents research on additive manufacturing, shape-memory materials, functional ceramics, structural design, manufacturing processes, tribology, coatings, sensing and monitoring, and engineering applications. The **Artificial Intelligence and Machine Learning** section demonstrates the growing role of intelligent computational approaches in prediction, image analysis, speech and language processing, healthcare, industrial systems, environmental monitoring and smart applications. Complementing these developments, the **Computational Methods** section addresses numerical and analytical modelling, finite element analysis, manufacturing simulation, engineering optimization, structural dynamics and virtual twin technologies. The proceedings also highlight the contribution of biological and medical sciences to technological innovation. The **Biotechnology and Bioengineering** section includes research on natural biological resources, food applications, biomaterials, polymeric scaffolds for bone regeneration, tissue engineering, engineered living materials, molecular biomarkers, biomedical instrumentation, cancer care and rehabilitation. The **Electronics** section presents developments in antennas, electronic circuits, embedded sensing, digital communications, wireless positioning, connected vehicles and automotive cybersecurity. In response to the increasing importance of environmental responsibility and the transition towards sustainable economic and industrial systems, the **Sustainable Green Energy and Clean Technologies** section addresses waste management, circular resource utilisation, bioenergy, hydrogen production, energy-efficient buildings, geothermal systems, environmental monitoring, solar energy, protective coatings and digitally enabled energy

communities. These contributions demonstrate how technological innovation, resource efficiency and digital solutions can support the development of more sustainable energy and environmental systems.
Beyond scientific and technological developments, the Conference recognises the importance of creating effective pathways for translating research into innovation and economic and societal value. The **Entrepreneurship and Innovation** section therefore addresses deep-tech enterprise development, entrepreneurial opportunities, prototyping, technology transfer offices, university–industry cooperation, innovation ecosystems, business competitiveness, project management, education and workforce development, green entrepreneurship, ESG approaches and user-driven, digital and cultural innovation. This section reinforces the importance of connecting research excellence with entrepreneurial capabilities, industrial needs and the wider innovation ecosystem.

An important objective of the Conference was to promote research careers and doctoral education by bringing students and young researchers into direct contact with experienced scientists, research groups, companies and innovation ecosystem representatives. The event provided opportunities to explore research topics, identify potential PhD supervisors and collaborators, learn about emerging technologies and better understand the opportunities associated with scientific and technological development.

International networking was an integral part of the Conference concept. Participants were encouraged to use the dedicated Conference web application, https://dtc.lineupr.com/dtc/ to connect with other attendees before and during the event, exchange information about their research interests and identify potential partners across the participating universities. This digital networking dimension complemented the physical exhibitions and enabled interaction beyond geographical and institutional boundaries.

The Conference was organised within the framework of the **A-SIDE project**, supported by the European Institute of Innovation and Technology (EIT) Higher Education Initiative. It contributed to the broader objectives of strengthening innovation and entrepreneurial capacity in higher education institutions, promoting knowledge valorisation, fostering university–industry cooperation and supporting the development of regional and international innovation ecosystems.

The **Conference Proceedings** provide a multidisciplinary overview of the research, technological developments and innovation activities presented at DeepTech Connect 2026. The contributions demonstrate the diversity of contemporary research, from fundamental scientific investigations and computational approaches to experimental developments, engineering applications, biomedical solutions, sustainable technologies and innovation-oriented business and educational models. Their thematic organisation also highlights important connections between the different fields, demonstrating how advanced materials and manufacturing, computational methods and artificial intelligence can support technological development, while biotechnology, electronics and sustainable energy provide pathways towards practical applications and solutions to societal challenges.

The First DeepTech Connect International Conference 2026 represents an important step towards establishing a sustainable international platform for connecting science, technology, education, entrepreneurship and industry. Its distinctive multi-university format and exhibition-oriented approach demonstrate the value of bringing research closer to students, companies and society, while creating opportunities for new partnerships, interdisciplinary cooperation and the commercialisation of deep-tech innovations.

The Conference was highly successful, attracting a large number of young people, early-career researchers, aspiring researchers, and PhD students. The scientific research fair format demonstrated that this innovative approach to presenting scientific work was very well received by young participants, who remained actively engaged throughout the Conference.

We hope that this publication will inspire further scientific research, encourage international and interdisciplinary collaborations, strengthen connections between academia and industry, and contribute to transforming scientific knowledge into innovative solutions with meaningful economic, environmental and societal impact.

Kragujevac, Serbia, 2026

Conference General Chair
Prof. Dr. Fatima Zivic
Faculty of Engineering
University of Kragujevac, Serbia

Contents

ADVANCED MATERIALS AND MANUFACTURING 27

Additive Manufacturing and Architected Materials 28

Design of Lattice Based Nitinol Actuators for Optimal Displacement and Load Bearing Capability 29

Yvonne Omowunmi-Kayode[1, 2] , Deeksha Hota[1,3] , Andrea Villano[1,3], Ajai Sankar[1,3], Ian Kiernan[1,2], Mehran Bahramyan[1,2,*] and Dermot Brabazon [1, 2] 29

Inducing the Two-Way Shape Memory Effect in Additively Manufactured NiTi Wires 37

Gavin Chapman[*a,1,2], Thomas Gillick[b,1,2], Ankur Majumdar[c,1,2], Meris Ikiz[d,1,2], Merve Nur Dogu[e,1,2], Neha Agarwal[f,1,2], Dermot Brabazon[g,1,2] 37

Review of Phase Transformation Behaviour in NiTi Lattice Structures Fabricated via Wire-Based Directed Energy Deposition 45

Terence Bowden[1,2,*], Ronan McCann[1,2], Dermot Brabazon[1,2] 45

Forensic Challenges in Additively Manufactured Materials: Reliability of 3D-Printed Evidence 49

Aleksandra Mitrovic[1], Nenad Mitrovic[2], Svetlana Pelemis[3] 49

3D Printed Porous Filters for Sustainable Water Treatment Applications 53

Nikola Kotorčević[1], Dušan Milojević[1], Fatima Živić[1] 53

Comparing 3D-printed Part Mesh Design Techniques for Thermoforming 57

Živana Jovanović Pešić[1], Strahinja Milenković[2], Nenad Petrović[3], Nenad Marjanović[3], Vesna Marjanović[3] 57

Advanced Materials, Microstructure, and Functional Materials 62

Microstructural Engineering and Mechanical Behavior of KNN and KNN-Ta Ceramics Sintered by Spark Plasma Sintering 63

Jade Clément[1], Isabelle Monot-Laffez[1], Micka Bah[1], Caroline Richard[1] 63

Solid lubricant coatings based on chromium nitride and metal sulfide deposited by reactive magnetron sputtering 67

Rubenson Mareus[1,2], Amaël Caillard[2], Caroline Richard[1], Anne-Lise Thomann[2], Loïc Gimenez[2] 67

Electromagnetic Shielding of Biochar-Coated Drywall Panels: a Performance Overview from 1 to 27 GHz 72

Isabella Natali Sora[1], Giuseppe Ruscica[1], Patrizia Savi[2] 72

Orientation Dependent EMI Shielding Performance of CFRP Laminates ... 76
Maria Vlacha[1], Angelos Voudouris Itskaras[1], Christos Vazouras [2], Alkiviadis S. Paipetis[1] ... 76
Mechanical Behavior, Structural Design, and Joining ... 80
Dimensional Optimization of a Cantilever Structure with Stress–Strain Analysis ... 81
Nebojša Arsić[1*], Nenad Kostić[1], Nenad Marjanović[1], Vesna Marjanović[1] ... 81
Shear Strength Testing of Adhesively Bonded Joints: Experimental and Numerical Analysis ... 85
Vladimir Milovanović[1], Veljko Kanjevac[1], Miloš Pešić[2], Gordana Jovičić[1] ... 85
Graphical representation of adhesive joints in technical drawings for railway industry ... 89
Srdjan Samardzic[1], Aleksija Djuric[1] ... 89
Investigation of the bond strength of laser-textured interference-fit joints ... 94
Meris Ikiz [*1,2], Merve Nur Dogu [1,2], Muhannad Obeidi[2,3], Dermot Brabazon[1,2] ... 94
Improvement of thin-walled semi-rigid beam-to-column connections in rack structures ... 101
Mirjana Piskulic[1], Rodoljub Vujanac[1*], Snezana Vulovic[2] ... 101
Microvoid nucleation mechanisms in cold forming metal components ... 106
Milija Kraišnik[1], Mladomir Milutinović[2], Jelica Anić[1] ... 106
Manufacturing Processes and Process Optimization ... 111
Force analysis for incremental forming of metal sheets ... 112
Jelica Anić[1], Mladomir Milutinović[2], Milija Kraišnik[1] ... 112
Laser Engraving of Submillimeter Text ... 117
Petar Todorović[1] ... 117
Radiotracers as Advanced Tools for Industrial Process Diagnostics and Optimization ... 122
Srđan Vuković[1*], Danijela Vuković[1], Aleksandar Vuković[2], Vesna Gojković Cvjetković[1], Svetlana Pelemiš[1] ... 122
Closing the Loop of the EURO-TITAN Process: Residue Valorisation, Wastewater Recycling and Development of Functional Materials ... 126
Mitar Perušić[1], Duško Kostić[1], Nebojša Vasiljević[1], Jelena Vuković[1], Srećko Stopić[2], Maria Teresa Bellver Baca[3], Radislav Filipović[1,4], Vladimir Damjanović[4], Bengi Yagmurlu[5], Konstantinos Sakkas[6] ... 126
Tribology, Wear, Lubrication, and Surface Engineering ... 131
An Enhanced Pin-on-Disc Tribometer with Integrated Lubrication and Digital Positioning System ... 132

Stefan Čukić[1], Anđela Perović[1], Slavica Miladinović[1], Miloš Matejić[1], Blaža Stojanović[1] ... 132

Influence of intermittent friction cycles on tribocorrosion behavior of 316L stainless steel in 5% $NaHCO_3$ ... 136

Kaouthar Bouguerra[1], Yan-Ming Chen[2], Alexandre Romaine[3], Nadege Ducommun[3], Pierre François Cardey[4], Alexis Fontaine[5], Caroline Richard[1] ... 136

Influence of Linear Reciprocating and Rotational Modes on Wear Track Width of Brass ... 142

Dragan Dzunic[1], Milan Eric[1], Vladimir Kocovic[1], Jelena Djusic[1], Zivana Jovanovic Pesic[1], Slobodan Mitrovic[1], ... 142

Influence of Organic and Inorganic Based Lubricating Greases on the Tribological Characteristics of Contact Pairs ... 146

Stefan Miletić[1], Dragan Džunić[1], Milan Ivković[1], Slobodan Mitrović[1] ... 146

Manufacturing Quality, Inspection, and Structural Monitoring ... 150

Visual Inspection Systems for Tool Wear Monitoring in Machining ... 151

Milan Ivković[1], Julija Bošković[1], Nadica Stojanovic[1], Strahinja Đurović[2], Stefan Miletić[1], Goran Devedzic[1], Suzana Petrović Savić[1], ... 151

Benchmarking a wireless strain gauge monitoring system against DFOS in CFRP ... 156

Maria Xenidou[1], Andreas Kalogirou[1], Kyriaki Tsirka[1], Dimitrios Fakis[1], Alkiviadis S. Paipetis[1] ... 156

Flexible Sensor Development for Smart Packaging via CeraPrinter F-Series System Technologies 160

D. A. Exarchos, P. T. Dalla, P. Pantazis, I. Angelopoulos and T. Matikas ... 160

Engineering Applications and Human-Centered Design ... 164

The Impact of Seatback Angle on Driver Discomfort: A Systematic Review ... 165

Slavica Macuzic Saveljic[1], Igor Saveljic[2] ... 165

When it comes to silence, it is necessary to face the opposite concept: noise insulation ... 169

Dragutin Tijanić[1], Tamara Dimitrijević[2] ... 169

ARTIFICIAL INTELLIGENCE AND MACHINE LEARNING ... 172

Foundations, Methods, and AI/ML Algorithms ... 173

The Predictive Power of Genomic Damage: A Machine Learning Approach to Endometrial Cancer Biomarkers ... 174

Aleksandra Marković[1], Bogdan Milićević[1], Marija Živković Radojević[2,3] ... 174

Data-Driven Prediction of Master's Degree Enrolment Using Explainable Machine Learning ... 178

[1]University of East Sarajevo, Faculty of Education, Bosnia and Herzegovina, 0000-0002-8119-5190 178

The importance of k-fold cross-validation in evaluating machine learning models for biomass gasifier output prediction. 183

Kadriye Deniz Olca[1], Özgün Yücel[1] 183

Stylistic Adaptation of a Pre-trained Language Model via Fine-tuning on a Slavic Literary Corpus 188

Aleksandr Uchaev and Vladimir Milovanović 188

Methodological framework for automated solving of mathematics competition problems in Serbia using LLMs 192

Marina Svičević[1], Aleksandar Milutinović[1], Nemanja Vučićević[1], Aleksandar Milenković[1], Miloš Pavković[2] 192

Implementation of an 8-bit Floating-Point Coprocessor for Deep Learning Applications 196

Isidora Grujić[1], Marija Božilov[1], Aleksandar Kondić[1], Vladimir M. Milovanović[1] 196

Decision-Making Algorithm for Intuitionistic Fuzzy Soft Sets 203

Nemanja Vučićević[1], Nenad Stojanović[1], Marina Svičević[1] 203

Clustering of the Zeros of Orthogonal Polynomials on the Semicircle 207

Marija P. Stanić[1], Tatjana V. Tomović Mladenović[1], Aleksandra S. Milosavljević[1] 207

Turning the Sky into a Tool for Peace 210

Mikel Espiga 210

Computer Vision, Image Analysis, and Pattern Recognition 214

Few-Shot Approach for Mouse Lung Segmentation in Synchrotron X-Ray Tomography 215

Andjela Blagojevic[1,2], Tijana Geroski[1,2], Nenad Filipović[1,2] 215

Development of a YOLOv11-Based Desktop Application for Concrete Crack Detection 220

Jovana Nikolic[1], Velibor Isailovic[1] 220

An affordable webcam-based real-time hand gesture recognition system using simple multilayer perceptron deep learning models 225

Ana Jovanović and Vladimir Milovanović 225

Di<Au>logues: Gesture-Based Navigation in Archaeological Museum of Thessaloniki. A Case Study using MediaPipe and p5.js. 230

Nikolaos Konstantinou[1], Nikolaos Papadimitriou[1], Michail Semoglou[2], Dimitrios Traperas[1] 230

Graph and Recurrent Neural Networks for MRI-Based Parkinson's Disease Analysis: A Short Review and Confidence-Driven Pruning Framework 234

Vasileios Stergiou[1], Angelos Giotis[1], Michail Vrigkas[2], Loukas Astakas[3], Spyridon Konitsiotis [3], Christophoros Nikou[1] 234

Speech, Language, and Human–AI Interaction 238

Real-Time Speech Analysis and Vowel Classification Using Linear Predictive Coding 239

Sava Todorović 239

Speech Emotion Recognition with LSTM: Cross-Lingual Transfer to Serbian 243

Nikola Radovanovic[1], Velibor Isailovic[1] 243

Automated Detection of Business Email Compromise Attacks in Serbian Language Using Linear Probabilistic Models 248

Miljan Koturović[†], Uroš Deljanin[†] and Vladimir Milovanović 248

Semestrify: A Cross-Platform System for Intelligent Academic Schedule Extraction and Calendar Integration 252

George Tzanopoulos[1], Vasileios Ralis[1], Christos Gogos[1] 252

How Do Translators Learn to Use AI? A Constructivist Approach 257

Airidas Kairys 257

Friendly Foes: Metaphorical conceptualization of AI based on the source domain of PERSON in English 263

Tatjana Grujić[1] 263

AI for Healthcare, Medicine, and Assistive Technologies 268

Building a Transnational AI-Health Innovation Network for Predictive Medicine and Health Crisis Preparedness: the HERACLES Project 269

Yorgos Goletsis[1], Konstantina Christogeorgou[1], Nikolaos Alexandros Theodorou[1] 269

AI-Guided 3D-Printed Meander-Line Antenna for Non-Invasive Bone-Tumor Detection 273

Tarlan Mahouti[1], Hakan Yılmazer[1], Mehmet Ali Belen[2] 273

Virtual Reality and Haptic Simulation in Dental Clinical Skills Development 277

Andrija Brkić[1], Marija Branković[2], Jelena Popović[3] 277

WellPet.ai: Edge AI-Powered Smart Collar for Real-Time Canine Health and Behavior Monitoring 281

Aleksandar Milutinović[1], Nikola Milanović[1], Branko Ilić[1] 281

Assistive app for BVI people BegIA 286

Oier Arano Urrutia and Alain Ordoñez Alvaro[1] 286

AI for Engineering, Manufacturing, and Industrial Systems 288

Decision-Boundary Instrumentation: Deployer-Side AI Monitoring for European Industry 289

Dorleta Urrutia-Onate[1], Asier Perallos[2], Enrique Onieva[3] 289

Development of an AI-Supported Optimization and Decision-Support Industrial SaaS Platform for FMEA Risk Management 294

Nikola Komatina[1], Nikola Banduka[2], Pavle Rvović[2], Kristina Mojsić[2] 294

Application of AI tools in analyses of Welded Structure 298

Aleksija Đurić[1], Miodrag Milčić[2], Srđan Samardžić[1], Dragan Milčić[2], Biljana Marković[1] ... 298

Application of artificial intelligence to predict and optimize driver comfort based on anthropometric data 301

Slavica Macuzic Saveljic[1], Igor Saveljic[2] 301

Data-Driven Artificial Intelligence Applications in Energy Production Systems 305

Mert Akin INSEL[1,2,*], Hasan SADIKOGLU[1,2], Ozgun YUCEL[3] 305

Predictive Modeling of Ignition Quality in Diesel-Biodiesel-Alcohol Systems for Sustainable Fuel Design 309

Kaan YEŞİLOVA[1], Özgün YÜCEL[2], Başak TEMUR ERGAN[3], Ümran ÜNLÜ[4] 309

AI for Energy, Environment, and Smart Infrastructure 313

Empowering Industrial Cooling through Predictive Intelligence 314

Jimena Castrillo, Álvaro Enriquez, Francisco Javier Enriquez 314

VodostAI – AI-based Flood Prediction and Prevention Platform ID 53122, Innovation Fund of Serbia – GovTech Program, 2024–2025 316

Boban Stojanović[1,2], Vladimir Bačanin[1], Boško Laković[1], Tomislav Mrđa[1], Dušan Stefanović[1], Miroljub Krstić[1] 316

Vodena - Next Gen Water and Energy software solutions 320

Miroljub Krstić[1], Dušan Stefanović[1] 320

Substrate Effects on Plant Metabolism: A Machine Learning Perspective 324

Nenad Zlatić & Milan Stanković 324
AI Applications in Mobility and Smart Systems 328
HAL Mobility AI: AI-Assisted Urban Mobility Orchestration for Local Taxi Ecosystems 329
Milovan Ostojić[1], Dragutin Ostojić[2], Mihajlo Čekerevac[1], Lazar Avramović[3] 329
COMPUTATIONAL METHODS 333
Analytical and Numerical Modelling Fundamentals 334
Modeling and Simulation of Shear in Shape Memory Alloys 335
Natalija Milićević[1], Aleksandar Bodić[1], Vladimir Dunić[1]* 335
Comparative Numerical Study of Two Interface-Capturing Methods for a Rising Bubble Problem 339
Aleksandar Bodić[1], Slobodan Savić[1*], Miloš Pešić[2], Marko Topalović[2] 339
Finite Element Analysis of Geotechnical Engineering Problems 346
Jovana Minić[1], Dragan Rakić[1] 346
Computational Modeling of Manufacturing and Processing 350
Analytical Modelling of Track Formation in Laser Powder Bed Fusion of IN939 351
Sampreet Rangaswamy[1,2], Merve Nur Doğu[1,2], Dermot Brabazon[1,2] 351
Determining the influence of process parameters during ironing using FEA 355
Marko Delić[1], Vesna Mandić[2], Dušan Arsić[1], Đorđe Ivković[1], Nada Ratković[1], Anđelka Ilić[1] 355
Computational Optimization and Engineering Design 360
Geometry Optimization of a PVDF-Based Piezoelectric Impact Sensor Using a Hertz-Contact-Informed Axisymmetric Finite Element Model 361
Strahinja Milenković[1,2], Nenad Grujović[1], Fatima Živić[1], ... 361
Optimizing Titanium Hip Implant Performance Through Surface Topography and Numerical Analysis 365
Aleksandra Vulović[1], Živana Jovanović Pešić[1], Đorđe Ilić[1], Strahinja Milenković[2], Dragan Džunić[1] 365
Structural, Dynamic, and Biomechanical Simulation 369
Structural dynamic simulation of an iconic railway infrastructure under a Multiple Moving Load scenario 370
Michele Guerini[1], Rosalba Ferrari[1], Giuseppe Cocchetti[2], Egidio Rizzi[1] 370

Virtual and Digital Twin Modeling ... 374

Virtual Twin Modeling of Bio-Inspired Butterfly Wing Flapping ... 375

Julija Boskovic[1], Milan Ivkovic[1], Ivan Grujic[1], Goran Devedzic[1], Suzana Petrovic Savic[1] ... 375

Advanced Mathematical and Theoretical Methods ... 380

Molecular Nanogears as Quantum Brownian Rotators ... 381

Jasmina Jeknic-Dugic[1], Igor Petrovic[2], Momir Arenijevic[3], Miroljub Dugic[3] ... 381

On the construction of multiple orthogonal polynomials with nearly diagonal multi-indices with respect to bilinear forms ... 386

Nevena Z. Petrović[1] ... 386

BIOTECHNOLOGY AND BIOENGINEERING ... 390

Natural Resources, Food Biotechnology, and Biological Systems ... 391

Biopotential of Autochthonous Lignicolous Mushrooms for Nutraceutical Applications ... 392

Aleksandra Novaković[1], Mirjana Šipovac[2], Milan Vukić[2], Neda Gavrić[1], Maja Karaman[3], Aleksandar Marić[4], Jelena Vulinović[2], Nataša Vojnović[5], Vesna Šolaja[3], Neda Ubiparipović[2], Enisa Musić[2] ... 392

The application of herbs and spices in the food industry ... 398

Vesna Gojković Cvjetković[1], Milenko Smiljanić[1], Željka Marjanović-Balaban[2], Milan Vukić[1], Dragan Vujadinović[1] ... 398

Integrated Non-Invasive Multi-Sensor Approach for Monitoring Fish Community Dynamics: A Case Study in Gruža Reservoir ... 402

Aleksa B. Cvetković[1]*, Tijana Z. Veličković[1,2], Vladica M. Simić[1] ... 402

Host–microbiota interactions in *Drosophila*: composition, regulatory mechanisms and translational relevance ... 407

Enisa Musić[1], Mirjana Šipovac[1], Aleksandra Novaković[2], Maja Palangetić[1] ... 407

Biomaterials, Scaffolds, and Tissue Engineering ... 411

PCL vs. PLA in Bone Regenerative Scaffolds: Current Potential and Challenges ... 412

Jana Baščarević[1], Marija Branković[1], Katarina Virijević[1] ... 412

Polymeric Scaffolds Based on PCL/PEG and Chitosan/PLA for Osteogenic Applications ... 416

Katarina Virijević, Jana Baščarević[1], Nenad Filipović[1] ... 416

Engineered Living Materials: Advanced Approaches for Biomedical Engineering ... 420

Marija Branković[1], Jana Baščarević[1], Fatima Živić[2] ... 420

Molecular and Cellular Biomedical Research 424

Can ATP Citrate Synthase Be Potential Biomarker For Breast Cancer Progression? 425

Jovana Jovankić[1], Milena Milutinović[1], Stefan Blagojević[1], Danijela Nikodijević[1], Aleksandra Nikezić[1], Danijela Cvetković[2] 425

Genetic Polymorphism and CGM-Based Glucose Prediction in Type 1 Diabetes 431

Daphne N. Katsarou[1,2], Eleni I. Georga[2], Stelios Tigas[3], Costas Papaloukas[1,2] and Dimitrios I. Fotiadis, Fellow, IEEE[2,4] 431

Biomedical Instrumentation and Laboratory Automation 435

Automated Cytogenetic Chromosome Spreading Device with Real-Time Environmental Control .. 436

Seyfettin Kazanır Alanya Alaaddin Keykubat University (ALKÜ) Antalya, Türkiye
Seyfettin.kazanir@alanya.edu.tr 436

Cancer Care, Clinical Management, and Digital Health 442

Improving quality of life after breast cancer 443

Iratxe Sobera 443

An Interdisciplinary Approach for the Management of the Elderly Multimorbid Patient with Breast Cancer Therapy-Induced Cardiac Toxicity 445

Alexandros Mitsis[1], Georgia Karanasiou[1,2], Dimitrios I. Fotiadis[1] 445

Smart Mirrors supporting healthier lives of Adolescents and Young Adults after cancer 449

Alexandros Mitsis [1], Georgia Karanasiou [1,2], Dimitrios I. Fotiadis[1] 449

Reway – Restoring Mobility, Redefining Care 452

Sara Milosevic, Jana Jankovic, Marija Velickovic, Jana Cvetkovic, Marko Ilic, Nikola Nikolic[1] 452

ELECTRONICS 456

RF, Antennas, and Electronic Circuit Design 457

A Cylindrical Dielectric Lens–Loaded Microstrip Patch Antenna With Enhanced Gain for 3.5-GHz Sub-6-GHz 5G 458

Tarlan Mahouti[1], Hakan Yılmazer[1], Mehmet Ali Belen[2] 458

Mathematical Model of a Ring-Based Digitally Controlled Oscillator for Frequency Range and Resolution Prediction 462

Đorđe Gačić[1], Lazar Ilić[2], Dejan Petković[3], Vladimir Milovanović[4] 462

Embedded Electronics and Sensor Systems 466

Arduino Temperature Monitoring System 467

Luka Virijević[1], Tijana Dimitrijević[2], Milan Čabarkapa[3] 467

Digital Communication and Signal Processing 471

Equalization and Carrier Recovery for Downstream Data Over Cable Service Interface Specification (DOCSIS) 3.0 Modems 472

Dejan Rakić, Milan Čabarkapa, Vladimir Milovanović 472

Wireless Networking and Positioning 478

A hardware/software platform for precise client device positioning in IEEE 802.11-based Wi-Fi communication networks 479

Zoran Đorđević[1], Nedeljko Stefanović[1], Vladimir Milovanović[2] 479

Connected Vehicles, V2X, and Automotive Cybersecurity 484

IoT and V2X Communications in Autonomous and Electric Vehicles 485

Sandra Antanasijevic[1], Milan Čabarkapa[1], Tijana Dimitrijević[1,2] 485

Cybersecurity of IoT-Based CAN Systems in Autonomous and Electric Vehicles 489

Ema Radovanović[1], Tijana Dimitrijević[2], Milan Čabarkapa[3] 489

Robotics 493

Industrial robots: global trends in exports, dynamics, and challenges 494

Anelia Stoikova 494

Integrating Advanced Robotic Solutions into Lean Industrial Systems: A Human-Centered Approach 498

Nastasija Nikolic[1], Marko Djapan[2], Arso Vukicevic[3], Djordje Milojevic[4], Ivan Macuzic[5] 498

SUSTAINABLE GREEN ENERGY AND CLEAN TECHNOLOGIES 502

Waste Management, Circular Economy, and Resource Recovery 503

Evaluating municipal waste management efficiency in the context of sustainable development: A DEA-based analysis 504

Angelina Cvetanović[1], Goran Bošković[1], Nebojša Jovičić[1] 504

Co-Digestion Plants and Production Assessment 512

Nikola Rakić[1], Vanja Šušteršič[2] 512

Composting of Food Waste in the Hospitality Sector: Lessons from Vrnjačka Banja 517

Sonja Veljović[1], Marija Kostić[2], Milica Luković[3] 517

Sustainable Hydrogen Production from Food Waste Using Integrated Gasification and Sorption-Enhanced Reforming 521

Ali Atas[a,b,*], Nader Javani[b], Betul Colak Karadag[b,c], Ozgun Yucel[d] 521

Sustainable Buildings, Energy Efficiency, and Water Systems 526

Integrated Monitoring and Determination of Showering Parameters in Residential Buildings 527

Natalija Aleksić[1], Vanja Šušteršič[2], Strahinja Milenković[3] 527

Assessing Building Energy Efficiency in Kragujevac (Serbia): Insights from a Retrospective Research Analysis 533

Nebojša Jurišević[1], Minja Velemir[2], Natalija Aleksić[3], Dušan Gordić[4] 533

Improving the Energy Efficiency of Water Hydraulic System Components within Sustainable Energy Plant 539

Nenad Todić[1], Slobodan Savić[1], Blaža Stojanović[1], Saša Milojević[1] 539

IT-Based Feasibility Assessment of a Shallow Geothermal System in a Renovated Educational Building in Kragujevac 543

Filip Nastić, Dubravka Živković, Davor Končalović, Vladimir Vukašinović, Mladen Josijević, Dušan Gordić 543

Environmental Monitoring and Clean-Technology Assessment 548

Assessing The Potential of Citizen-Installed PM2.5 Sensors for Air Pollution Prediction and Mapping 549

Filip Nastić 549

Assessment of PVGIS Accuracy Against EnergyPlus Simulations in Europe 553

Novak Popović[1], Novak Nikolić[1], Nebojša Lukić[1], Minja Velemir Radović[1] 553

Renewable Energy and Solar Technologies 560

Performance Enhancement of $FASnI_3$ Perovskite Solar Cells with CBTS Hole Transport Layer: A SCAPS-1D Study 561

Khadija BOUGHANBOUR*[1] https://orcid.org/0009-0000-3905-4741, Mustapha SAHAL[1] http://orcid.org/0000-0003-0528-8413 561

Digital Infrastructure for Collective Solar Self-Consumption: Enabling Scalable Energy Communities through Data, Algorithms and Governance Platforms 566

Mikel Ubiria Pérez 566

Sustainable Materials, Coatings, and Corrosion Protection 569

Development and Optimization of Water-Based Acrylic Coatings for Enhanced Corrosion Resistance of Metallic Materials 570

Milorad Tomić[1,2], Nebojša Vasiljević[1], Marija Mitrović[1], Regina Fuchs-Godec[3], Jelena Bajat[4] 570

Application of Thyme Extract as a Steel Corrosion Inhibitor in HCl and NaCl Solutions 574

Marija Mitrović[1], Nebojša Vasiljević[1], Regina Fuchs-Godec[2], Milorad Tomić[1,3] 574

ENTREPRENEURSHIP AND INNOVATION 578

Entrepreneurship, Start-ups, and Entrepreneurial Development 579

Opportunities for young Entrepreneurs 580

Maider Beitialarrangoitia[1], Laida San Sebastian[2] 580

Fostering the Growth of Deep-Tech Enterprises Through Enterprise Europe Network 584

Milan Vukic[1], Vesna Gojković Cvjetković[1] 584

Prototypes in the Innovation Development 589

Saša Vasiljević[1], Jelena Domanović[1], Jasna Glišović[2] 589

A Scientific Coordinator Enabling Industry Access to Laboratory Services 593

Panagiotis Pantazis[1] 593

Innovation Ecosystems, Technology Transfer, and Competitiveness 597

Understanding Governance and Capabilities in Technology Transfer Offices: Patterns of Efficiency 598

Konstantina Christogeorgou[1], Maite Couto-Ortega[2], Nikolaos Alexandros Theodorou[1], Maider Beitialarrangotia[2], Maria Vivar-Simon[2], Giovanna Campopiano[3], Nikolaos Mylonidis[1], Yorgos Goletsis[1] 598

Competitiveness, internationalization, and innovation in the creative and cultural industries, COMP-ICC project's presentation 603

Maite Couto-Ortega[1], Maria Vivar-Simón[1] 603

Green Innovation and Innovation Ecosystem Participation on Family and Non-family SMEs Performance 607

Samuel Ashong[1], Giovanna Campopiano[1], Mara Brumana[1] 607

Identity-based Legitimacy Buffering and Organizational Attention Triggering Strategic Distinctiveness in Family Businesses 612

Qiuyang Xu[1], Tommaso Minola[1], Nadine Kammerlander[2] 612

Entrepreneurship, Teams, and Management 616

Teampreneurship for Climate Action: An Open Approach to Green Entrepreneurship Education 617

Lander Jimenez Ocio[1], Jerémy Legardeur[2], Maialen Mendizabal[1], Mar Rubio-Varas[3] 617

Beyond Time, Cost and Scope: Managerial Skills in Achieving Contemporary Dimensions of Project Success 621

Mirjana Jokanović Đajić[1], Danijela Ćirić Lalić[2], Milica Radovanović[1], Ranka Sudžum[3] 621

Adapting Quality Management Models to Local Organizations: A Literature Review on EFQM and Hybrid Decision-Making Approaches 625

Tijana Petrovic[1] 625

Innovation, Education, Skills, and Workforce Development 629

The Leaky Pipeline in STEM careers: Gender Segregation and the Shift Toward Pedagogical Careers 630

Sanja Milić[1], Svetlana Pelemiš,..... 630

AI4DLG: Establishing a Joint International Master's Programme in Artificial Intelligence for Digital Learning and Gamification and Developing Its Digital Presence 634

Jenny Pange[1], Eugenia I. Toki[2]..... 634

Integrating Digital and Green Skills in Higher Education 638

Jenny Pange[1], Dimitrios Panagiotou2, Ioannis Fudos[3] 638

Developing a European VET Model for Rural Destination Managers- A Competence-Based Approach to Sustainable Tourism 642

Soultana Demirtzioglou1, Yorgos Goletsis2, Naoum Mylonas3, Luca Reitano4 642

Green, Social, and Sustainable Innovation 645

Spontaneous Ecosystems in Rural Areas: A Case Study (*Espacio Comün*, Nalda, Spain) 646

Sofía Moreno-Domínguez[1] 646

Mara Stanojević[1], Jelena Nešić[1], Marta Jovanović[1], Mentors: Kristina Cvetković, Bojana Đurković 650

Multi-Criteria Decision Analysis for ESG measurement: A Systematic and Bibliometric Review .. 654

Yorgos Goletsis[1], Vasiliki Spyridonos[2] 654

Strengthening University Disaster Preparedness: Cross-Country Intervention Strategies from the DRU Project 658

Konstantinos Plachouras[1], Zoi Nikiforidou[2], Dimitrios Panagiotou[3], Jenny Pange[4] 658

User-Driven, Digital, and Cultural Innovation 661

Rethinking Personal Safety Through User-Driven Innovation 662

Ivan Martin[1] 662

The role of Avatar in Business – the case study of a company Priče iz Kanca 665

Jelena M. Pavlović Jovanović[1], Nataša Spasić[2], Milan Todorović[3] 665

InTransparency - Verified Talent Marketplace 669

Fabio Chefane[1] 669

DeCiTeL (Democratic Citizenship Teaching and Learning) 675

Jenny Pange[1], Zoi Nikiforidou[2] 675

#DanceMuse: A Phygital Hybrid Museum for the Multisensory and Interdisciplinary Interpretation of Traditional Dance in Epirus 678

Aikaterini Vasilaki[1], Melina Papadopoulou[1], Christina Nika[2], Dimitrios D. Vergados[2], Stavros Papapanagiotou[3], Apostolos Karalis[3], Christos Papakostas[1] 678

Modeling and Simulation of Shear in Shape Memory Alloys

Natalija Milićević[1], Aleksandar Bodić[1], Vladimir Dunić[1]*

[1]*Faculty of Engineering University of Kragujevac, Kragujevac, Serbia, milicevicnatalija18@gmail.com, 0009-0008-4564-0841, abodic@uni.kg.ac.rs, 0000-0002-1713-6540, dunic@kg.ac.rs, 0000-0003-1648-1745*

*Corresponding author: dunic@kg.ac.rs

Abstract

In this paper a simulation of the pseudoelastic behavior of a NiTi shape memory alloy (SMA) during a shear loading is presented. Experimental data from the literature were used as a reference for validating the simulation model implemented into the in-house PAK-DAM finite element software (FEM) software. The geometry of the specimen was created according real specimen dimensions and the finite element mesh, boundary conditions and material parameters were defined according to the experimental setup. The shear loading simulation was performed by using the PAK-DAM software to reproduce the loading–unloading cycle observed in the experimental study. A comparison of the obtained results demonstrated a high correlation between the simulated and experimental curves, particularly in the regions of martensitic forward and reverse phase transformation. The proposed FEM model accurately represents the mechanism of martensitic phase transformation in SMA during the shear loading and can be successfully applied to the analysis and design of components made of NiTi SMA.

Keywords: shape memory alloys; pseudoelasticity; NiTi alloy; martensitic transformation; numerical simulation; PAK-DAM software; shear loading; UN SDG 9

1. Introduction

Shape Memory Alloys (SMA) are a specific class of materials capable of recovering their original shape through reversible phase transformations between austenite and martensite [1]. Among them, SMAs based on nickel and titanium are the most widely used due to their excellent biocompatibility and high corrosion resistance. The material's behavior is primarily based on two phenomena: the shape memory effect and pseudoelasticity (superelasticity), both of which are closely connected to the martensitic transformation.

While tensile behavior is extensively documented, shear loading remains a critical and complex deformation mechanism in many engineering applications [2]. Due to the difficulties of experimental characterization under complex loading conditions, numerical methods such as the Finite Element Method (FEM) have become indispensable for predicting thermomechanical responses [1]. This paper aims to present a numerical simulation of the shear process in a NiTi alloy using PAK-DAM v26 [3] FEM software and to validate the constitutive model by comparing results with experimental data from the literature.

2. Materials and Methods

The numerical simulation is based on the experimental setup described in literature [2], where the authors used a NiTi specimen (Ti–55.8 wt% Ni) with an austenite finish temperature of A_f = 283 K. The specimen is a

rectangular plate of dimensions 27 × 30 × 0.5 mm with six 4 mm diameter holes for fixation [2]. The experimental setup was designed as a specialized device to convert compressive loading into a cyclic loading–unloading shear process [2] schematically shown in Figure 1.

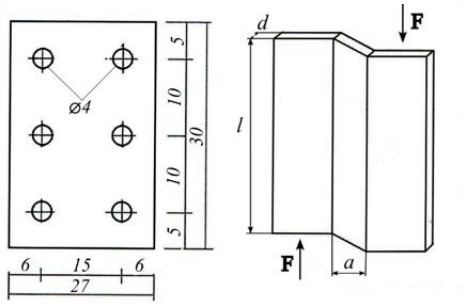

Figure 16 *Schematic representation of the analyzed SMA specimen and the shear test loading [2]*

For the simulation, the Lagoudas [4] reformulated constitutive model [1] is employed and the geometry, mesh and boundary condition are created according to the physical constraints of the experimental shear test [2]. A quarter-model three-dimensional finite element mesh is generated, exploiting the specimen's geometric symmetry. The material parameters are identified by the repeated simulations by using the PAK-DAM software package.

3. Results

Numerical simulation provides detailed insight into the distribution of shear strain, martensitic volume fraction, and equivalent transformation strain within the specimen [5]. As shown in Figure 2, the highest shear strain values occur in the central part of the specimen, while lower values are observed near the holes and boundary conditions. This distribution is a direct result of the specimen geometry and the method of load application.

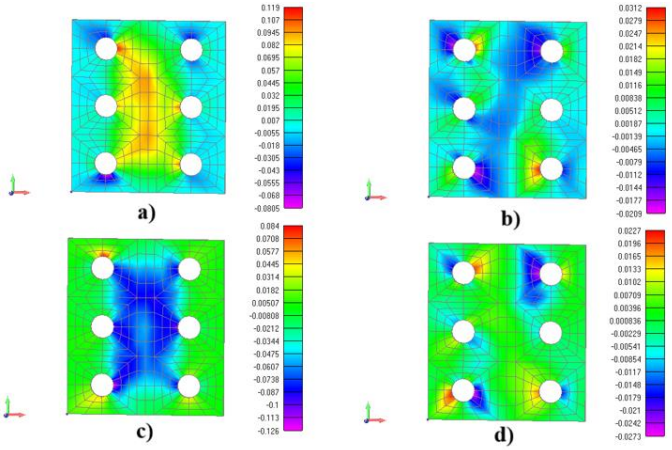

Figure 17 *Shear strain at simulation step: a) 20, b) 40, c) 60, and d) 80 [5]*

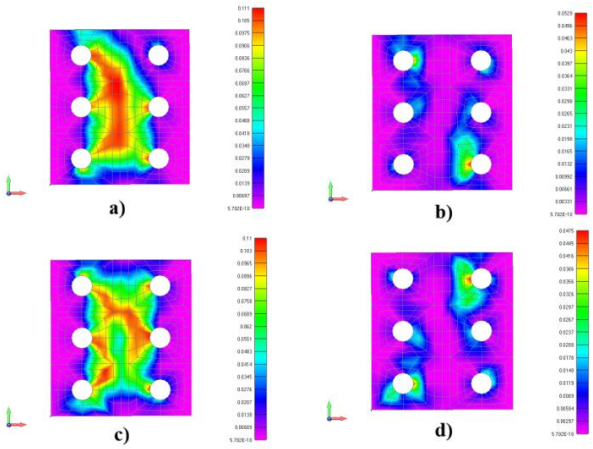

Figure 18 *Martensite volume fraction at simulation step: a) 20, b) 40, c) 60, and d) 80 [5]*

During the loading process, the volume fraction of the martensitic phase gradually increases (Figure 3). At the beginning of the analysis, the material is in the austenitic phase. As the load increases, the martensite phase

progressively spreads through the specimen volume. The highest martensite fraction is found in regions with the most significant deformation.

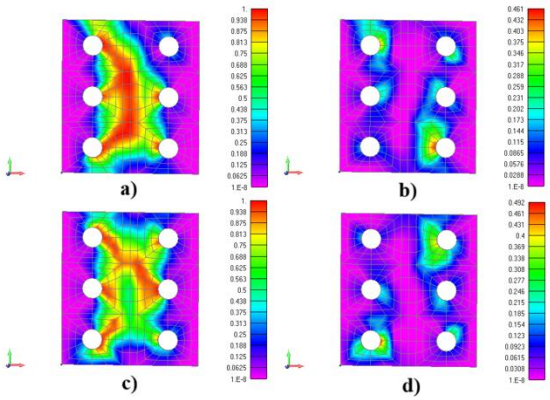

Figure 19 *Equivalent transformation strain field at simulation step: a) 20, b) 40, c) 60, and d) 80 [5]*

The equivalent transformation strain represents the measure of strain resulting from the martensitic phase transformation. The obtained results show that the peak values of transformation strain are localized in zones under the highest stress, confirming the direct correlation between the mechanical state and phase transformation in SMA materials. The initial linear slope represents the elastic deformation of the austenite phase. Increased loading triggers the martensitic transformation, manifested as a non-linear segment on the stress-strain curve (Figure 5a). During unloading, the reverse transformation back to austenite occurs, forming a hysteresis loop that defines the material's pseudoelastic behavior.

4. Discussion

The simulation result (Figure 5a) shows that the loading cycle initiates with a linear elastic region, corresponding to the stable austenite phase. The subsequent parabolic segment marks the stress-induced forward martensitic transformation, which continues until peak stress and strain are reached.

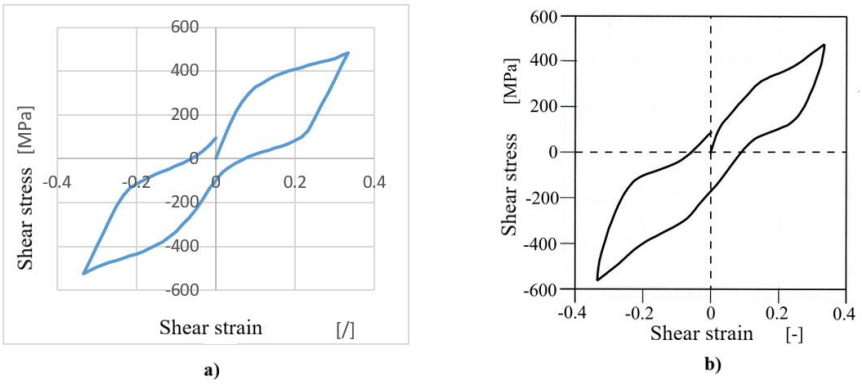

Figure 20 *Comparison of stress-strain diagrams: a) Numerical simulation results [5]; b) Experimental data from literature [2]*

During unloading, an initial linear decrease is followed by a second parabolic segment representing the reverse phase transformation of martensite back into austenite. The symmetry observed in the negative quadrant of the diagram confirms the material's consistent pseudoelastic response under shear loading. A comparison with experimental data from literature [2] represented in Figure 5b, confirms a high degree of correlation. Both the simulation and the experimental curves exhibit identical transformation stages and closely matched critical values. This strong agreement validates the reliability of the applied simulation model in successfully reproducing the complex behavior of the SMA.

5. Conclusions

This study analyses the pseudoelastic behavior of NiTi SMA alloys through numerical simulation of shear loading by using the PAK-DAM software package [5]. By applying a SMA constitutive model that relates stress, strain, the martensitic phase transformation between austenite and martensite was investigated. The main objective was to validate the functionality of the SMA constitutive model [1] in PAK-DAM software for shear loading case by comparing the obtained simulation results with experimental data from the literature [2]. The results show a high level of agreement in the shape of the shear stress–shear strain diagram, where the typical hysteresis loop confirms reversible phase transformations. A slight deviation of the curve after unloading indicates a small residual deformation, which is characteristic of these alloys. This confirms that the PAK-DAM software represents a reliable tool for the simulation and optimization of SMA in engineering applications.

Acknowledgment

This research is supported by the Science Fund of the Republic of Serbia, #GRANT No 7475, Prediction of damage evolution in engineering structures – PROMINENT, and by the Ministry of Science, Technological Development and Innovation, Republic of Serbia, Agreement No. 451-03-34/2026-03/200107.

References

[1] Dunić V. Razvoj i implementacija termo-mehaničkog konstitutivnog modela za numeričku analizu ponašanja materijala sa svojstvom pamćenja oblika, PhD Thesis, Kragujevac: Faculty of Engineering University of Kragujevac; 2015.
[2] Tobushi H, Matsui R, Takeda K, Pieczyska E. Mechanical properties of Shape Memory Alloys Materials. New York: Nova Science Publishers; 2013.
[3] Živković, M.; Dunić, V.; Rakić, D.; Grujović, N.; Slavković, R.; Kojić, M. PAK-DAM v26 Software for Damage and Fracture Simulation; Faculty of Engineering, University of Kragujevac: Kragujevac, Serbia, 2026.
[4] Lagoudas, D. C. Shape memory alloys: modelling and engineering applications; Springer; 2007
[5] Milićević N. Simulacija smicanja na uzorku od legure sa svojstvom pamćenja oblika, BSc thesis, Kragujevac: Faculty of Engineering University of Kragujevac; 2025.